No.	Description	Material	Stock Code
1	LID	316L ST.STL.	60S030000
2	SINGLE BASKET	316L ST.STL.	80S011A00
2	DOUBLE BASKET	316L ST.STL.	80S012A00
3	BASKET COMPRESSION PLATE	316L ST.STL.	82S010000
4	TOP GASKET	E.P.	60S03000E
4	TOP GASKET	SILICONE	60S03000S
4	TOP GASKET	VITON	60S03000V
5	INNER GASKET	E.P.	82S01000E
5	INNER GASKET	SILICONE	82S01000S
5	INNER GASKET	VITON	82S01000V
6	CLAMP	304 ST.STL.	60S030002
7	CLAMP TEE BAR	316L ST.STL.	60S000022
8	DRAIN CAP	316L ST.STL.	60S000005
9	VENT CAP	316L ST.STL.	60S000004

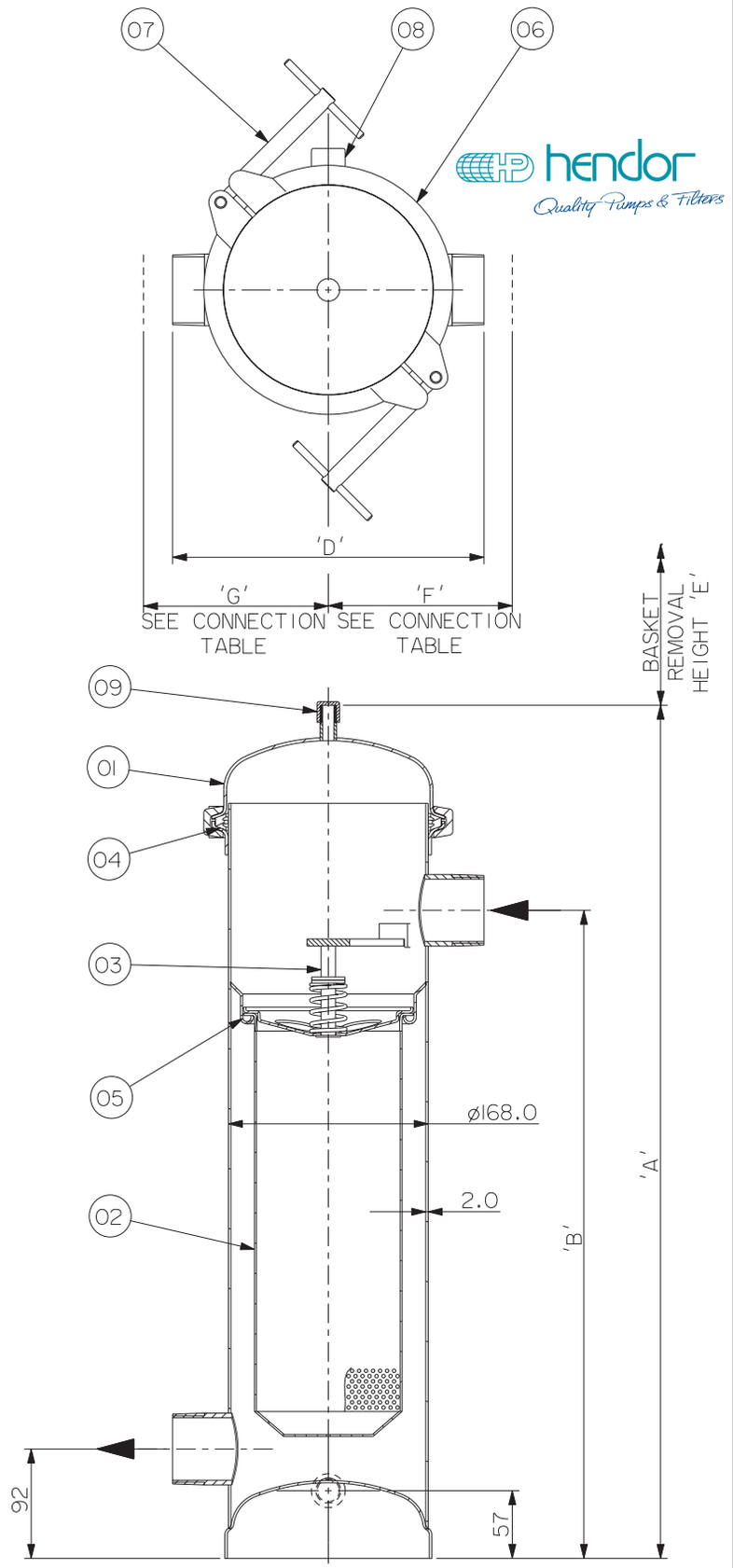

Connection Options	Dim 'F'	Dim 'G'
DN50 BS4504 PN16 SO	181	137
2" ANSI B16.5 150lb SO	181	137
DN50 DIN 2633	221	177
2" TRI-CLAMP	135	135
NW50 DIN 11851 'M'	148	148
2" RJT'M'	135	135
2" IDF'M'	135	135

DESIGN PRESSURE Bar g		DESIGN TEMPERATURE °C	
LIQUID	GAS	MIN.	MAX.
10	N/A	0	110

Model	No. of Bags	Max Operating Conditions Bar.g and °C	Materials of Construction	Connection Size and Type	Volume (litres)	Dry Weight (kg)	Dimension (mm)				
							A	B	C	D	E
82011AAN20AIEE	1 x SINGLE	SEE TABLE	316L ST.STL.	2" BSP'M'	13.3	12.4	718	545	92	262	300
82012AAN20AIEE	1 x DOUBLE	SEE TABLE	316L ST.STL.	2" BSP'M'	21.0	17.0	1078	905	92	262	650

www.hendor.com

F-7-HB1/HB2-SS

FOR 5 1/2" DIAMETER BAGS

Drg. No. 8201-1

Rev. 2